Thinking of you

Electrolux

瑞典 伊萊克斯
果汁機
Blender
EBR2000

使用說明書
Operating Instruction
- 繁體中文
- English

家庭用

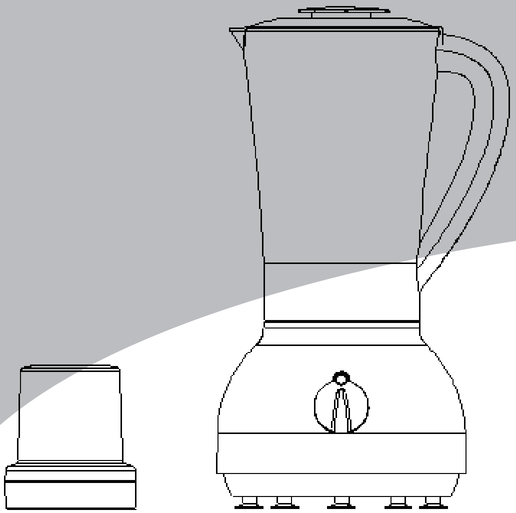

感謝您購買Electrolux 伊萊克斯的果汁機。請詳讀本使用說明書再正確地使用。請確認保證書是否正確紀錄「購買日期、經銷商店名」，和使用說明書一起妥善存放，並將回函寄給本公司。

在使用前請務必詳讀本使用說明書。

●認識您的果汁機

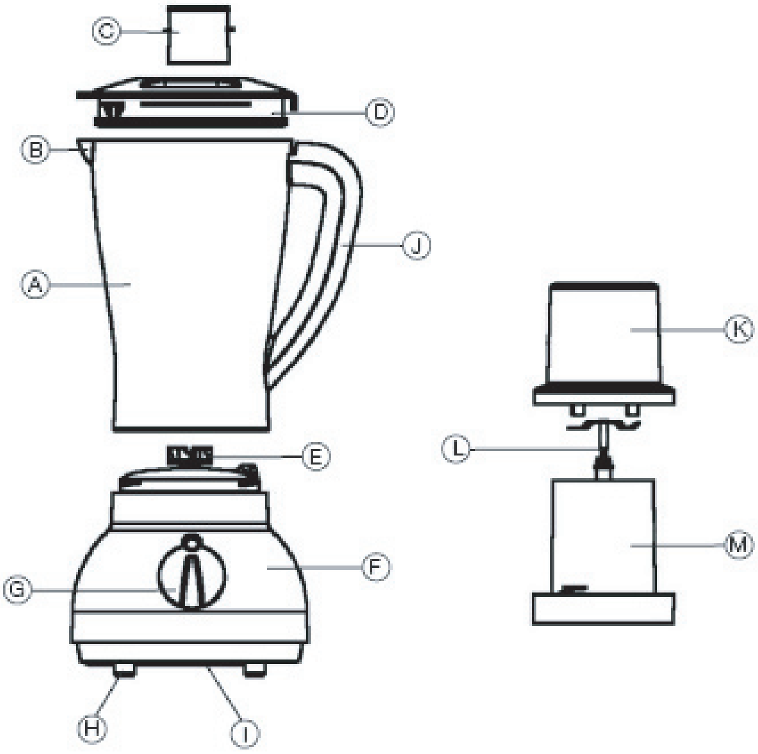

A 攪拌杯

B 杯嘴

C 小量杯

D 杯蓋

E 固定式刀組

F 馬達底座

G 轉速旋鈕

H 止滑墊

I 電線收納格

J 握把

K 研磨杯蓋

L 研磨刀組

M 研磨杯

備註：並非全通路販售的該機型，皆有附研磨杯
本產品示意圖僅供說明使用，可能與實際產品有所不同

●親愛的顧客

在使用本產品之前請細讀此說明書並遵照操作。

說明書請妥善保存，以備將來參考，並一併交給後來的使用者。

⚠ 注意事項

本電器符合台灣電器安全規範的標準。然而，身為製造商，我們有責任讓您了解以下使用此電器的安全注意事項:

兒童安全

- 機器在無人監護的情況下，請勿讓兒童自行操作。
- 請丟棄所有塑膠包材，以防孩童或寵物不慎因塑膠包材發生窒息的情況。

一般安全

- 使用前請確認機器適用的電壓與家中所使用電壓一致。
- 拔掉插頭時請不要強拉電源線。
- 在以下情況請勿使用此機器:
- 發現機器已有損壞
- 發現插頭或電源線已有損壞
- 如果電源線或插頭已有損壞，或是機器運作不正常，或以其他任何方式的損壞，請不要繼續使用該機器，應交回原廠維修點進行測試、維修、調整。
- 請不要將機器交由非原廠授權之維修人員修理，因不當的修理將可能造成危險。若需要維修，請與伊萊克斯客服中心或授權之經銷點聯絡。
- 任何因不當使用所造成的機器故障，將不在原廠的保固範圍內。
- 在沒有正確指引及監護下，請勿讓兒童或不熟悉機器的人士操作機器，或是讓殘弱人士自行操作本機。
- 本機器設計為家庭使用，改做營業用途將不列入保固範圍。

●產品操作

第一次使用

本機器適用於製作果汁、攪碎水果、蔬菜或攪拌奶油、及攪碎冰塊。

準備使用

- 在您拔下插頭或插上插頭之前，請確認機器隨時保持電源關閉。
- 在攪拌杯內裝入食材之前，請勿啟動機器。在機器尚未完全停止運作前，請勿隨意移除上蓋。
- 請勿在無人監護的情況下，讓機器自行運作。
- 請勿將電源線、插頭或整台機器浸入水中或任何液體中，以免造成危險。
- 機器運作時，請避免碰觸機器會發熱的部件，也請保持頭髮、衣物、器皿與機器的距離，更不可將手或其他任何物體放入攪拌杯中。
- 請勿將攪拌杯裝填超過最大容量(1.25L)，以免發生液體外漏的情況。
- 不使用機器，或是要開始清洗時，請確保機器已經關閉電源並已拔下插頭。
- 不得已要碰觸刀片時，請務必小心。
- 本機器不適用於攪拌熱食。
- 請勿使用任何熱源來烘乾塑膠零件。
- 請勿使用本機器攪拌顏料或油漆，否則將可能造成危險。
- 使用非原廠或非適用於本型號的配件，將恐造成機器損害，該損害將不在機器原有的保固範圍之內。
- 請勿自行修理機器，以免保固權益受損或造成機器損害。
- 若發現電源線、插頭或其它零部件有任何損壞，請勿繼續使用機器。

機器組裝

- 本機器的刀組是固定式的，如需拆卸，請交由原廠授權的專業維修人員處理。
- 將攪拌杯裝妥至馬達底座上，以順時鐘方向轉動攪拌杯直到完全鎖緊。(圖1)
- 蓋妥上蓋，以順時鐘或逆時鐘方向轉動上蓋，使上蓋邊緣突出之卡榫對齊攪拌杯握把上方的凹槽。(圖2)
- 將小量杯裝妥至上蓋。

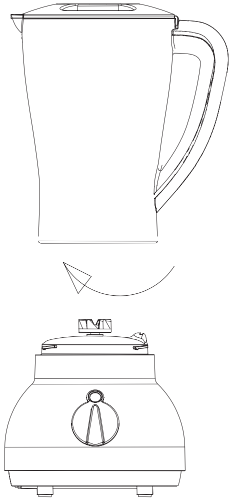

(圖1)

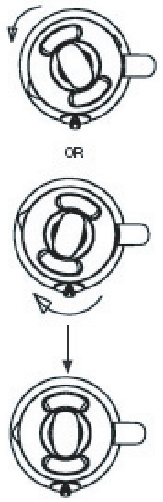

(圖2)

機器拆裝

- 確認電源插頭已經拔下
- 取下上蓋
- 將攪拌杯以逆時鐘方向轉動然後向上提起

開始使用

- 將機器放置在平穩且乾燥的表面。
- 取下上蓋，將需要攪拌的食材裝入攪拌杯中。

  重要!! 請勿填入超過1.25L的食材

- 攪拌過程中，若需加入其他食材，可直接由上蓋小孔將食材放入，您亦可先將食材放進所附的小量杯中，再倒入攪拌杯，而後請記得將小量杯蓋回上蓋以免食材從小孔濺出。
- 使用本產品時請隨時保持上蓋蓋妥。
- 將電源插頭插上，並將轉速旋鈕轉至所需的轉速檔位。
- 我們建議您從低速(速度1)開始，然後再調整至高速(速度2)。轉至瞬間功能(P)時，機器會以高速運轉。
- 每次請勿連續使用本機器超過3分鐘，每運轉3分鐘應讓機器停機冷卻至室溫後再使用。
- 當食材攪拌程度已到達要求，請將轉速調至0的位置。 (圖3)

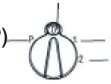

（圖3）

- 請勿攪拌熱食及熱飲。
- 將上蓋取下前請先取下攪拌杯。

研磨杯操作說明

- 研磨杯僅適用於乾性材料的研磨。
- 首先將馬達底座放置在平穩且乾燥的表面上，並確認電源插頭已經拔下。

- 將準備研磨的材料裝入研磨杯中。
- 將研磨杯上蓋裝妥，並以順時針方向轉緊，直到上蓋鎖進研磨杯上的溝槽。
- 再將研磨杯裝至馬達底座上，同樣以順時針方向轉緊，直到研磨杯已經鎖緊，此時機器才能被啟動，這是本產品的安全鎖設計。(圖4及圖5)

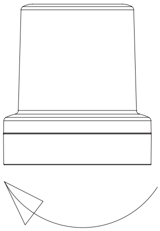

（圖4）

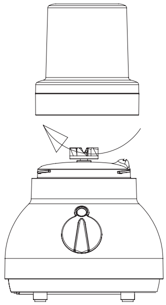

（圖5）

- 將插頭插上，再將轉速旋鈕調整至所需的速度。若想要加速研磨，可將旋鈕轉至並保持在”P”的位置。

  注意：本研磨杯最大容量為30克

- 每次請勿連續使用本機器超過3分鐘。
- 在打開上蓋時，請確認刀片已經停止運轉。

安全鎖裝置

安全鎖裝置將防止本機器在未正確安裝之下就被啟動。

碎冰功能

本機器可適用於碎冰。碎冰時，請務必加入少許的水。

- 倒入少許的水。
- 啟動機器。任何轉速皆可用於碎冰，但是高轉速的碎冰效果較佳。
- 碎冰同時，若需添加冰塊，可由杯蓋中央的小孔添加。

清潔及維護

⚠ 清洗前，請先將電源插頭拔掉。

⚠ 請確保水分不會滲入馬達。

⚠ 可用沾濕的布來擦拭馬達底座外殼，但絕對不可將馬達底座整個浸入水中或直接在水龍頭下沖洗。

- 利用瞬間功能(P)來快速且安全的清洗攪拌杯及刀組。
  - 攪拌杯中倒入溫水，並加入幾滴清潔劑
  - 啟動瞬間功能(轉速旋鈕轉至P)來使溫水及清潔劑混合
  - 最後，將攪拌杯拿至水龍頭下清洗乾淨
- 清洗研磨杯時，將研磨杯及杯蓋直接浸泡在溫肥皂水中，然後再拿至水龍頭下沖洗乾淨。
- 機器的零組件有可能會在攪拌帶有色素的材料後，導致變色，此為正常現象。

●回收、報廢處理

包裝材料

本產品的包裝材料是環保、可回收利用的。丟棄時請丟入垃圾分類相對應的處理箱內。

舊機回收、報廢處理

在產品或其包裝上的 標示說明本產品不能當作一般家庭垃圾丟棄，只能交給專門的電器回收站處理，以杜絕因不當丟棄所造成的潛在對環境和健康的影響。如您需要任何關於產品回收方面的訊息，請聯繫當地廢棄物回收服務點。

●客戶服務

本公司產品是採高品質規格來生產的。但若機器發生故障，且無法從說明書中得到解答，請聯繫您的原經銷商或與伊萊克斯客服部聯絡。

免費客戶服務專線: 0800 888 259　週一至週五 09:30-18:30

●技術資料

- 額定電壓：110V
- 消耗功率：400W
- 頻率：60Hz

ENGLISH

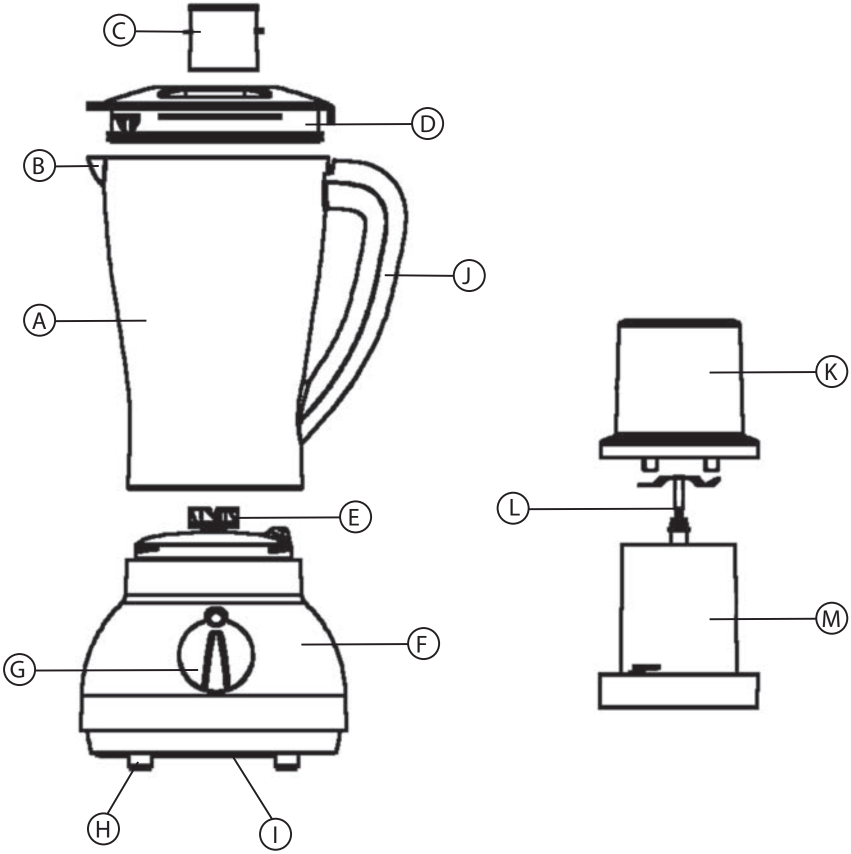

A Plastic jar

B Pouring outlet

C Smart dosage cup

D Lid

E Blade assembly (fixed)

F Motor housing

G Speed selector

H Non-slip feet

I Cord storage drawer (at the bottom of the appliance)

J Handle

K Bowl cover

L Grinder blade (fixed)

M Chopping bowl

Not all the products sold in channels are accessorized with a chopping bowl.
Line drawings are solely for illustratio n purposes and are subject to variations from actual product .

Dear Customers,

Please read through these operating instructions carefully. Above all please observe the safety instructions on the first few pages of these operating instructions! Please keep these operating instructions for future reference. Pass them on to any subsequent owner of the appliance.

⚠ Safety Instructions

This appliance corresponds to accepted technological standards with regards to safety and to the Appliance Safety Law. Nevertheless as a manufacturer we are committed to familiarise you with the following safety instructions:

CHILD SAFETY

- Do not leave the appliance running unattended or let children near the appliance unsupervised.
- Discard all packaging to avoid the risk of suffocation of children or pets.

GENERAL SAFETY

- The appliance should only be connected to main supplies with the same voltage and frequency ratings as those indicated on the rating label.
- Never use the cord to pull the plug out from the socket.
- Never try to operate the blender if
  - the casing has been damaged.
  - the cord has been damaged.
- If the power cord for this appliance has been damaged, it should only be replaced, for safety reasons, by the manufacturer or Customer Service, or by a suitably qualified person.
- Repairs to this appliance may only be carried out by qualified service engineers.

  Considerable danger may result from improper repairs. If repairs become necessary, please contact the Electrolux's Customer Care Department or your authorised Electrolux's dealer.
- The manufacturer is not liable for any damages which are caused by using the appliance for any other purpose than that intended or incorrect use.
- This appliance is not intended for use by people (including children) who, due to lack of experience or knowledge, are unable to operate it safely, or for use by people (including children) whose physical, sensory or mental capabilities are reduced, unless a person responsible for them has shown them how to use it safely, and has supervised them initially.
- This product was designed for domestic use only. Any commercial use will result in loss of warranty.

OPERATION

Your blender is good for preparing drinks, cutting fruits and vegetables, preparing creams, etc and can also be used for crushing ice.

Preparing for use

- The blender must always be off before being plugged or unplugged from the socket.
- Never turn on the blender with the jar empty and do not remove the lid before making sure the blades have completely stopped.
- Do not leave the product running while you are away even for a while.
- To protect against electrical shock or other accidents, do not immerse the electrical cord, plug or the blender itself in water or any other liquid.
- Avoid contact and keep hair, clothes and utensils away from the heated parts of this product to avoid accidents and never insert your hands or any object inside the jar while the blender is still running.
- Do not fill the jar above the 1.25 litres mark. This is to avoid any possible leakage.

- Turn off the blender and unplug it when it is not in use and for cleaning.
- Take maximum care with your hands when handling the blades.
- Never use the blender to blend hot liquid.
- Plastic parts should never be dried at or near direct heat sources.
- The appliance must not be used for mixing dyes (paints, or lacquer, etc).This may cause explosions.
- The use of accessories that are not the blender’s original ones may damage its functioning and may cause harm to the user and to the product as well as loss of warranty.
- In order not to lose the warranty and to avoid technical problems, do not try to fix the blender at home.
- Do not use the product if the electrical cord, plug or other components are damaged in any way.
- For replacement of parts, call an Electrolux Technical Service Center.

Assembling The Blender

- The blender comes with a fixed blade system. Only an authorised technician is allowed to disassemble the blade.
- Place the jar on the motor housing, then turn the jar clockwise until the jar is fully secured. (Fig.1)

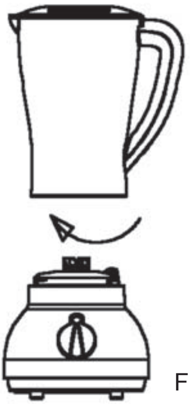

Fig.1

- Replace the lid on the jar, then turn it in clockwise or in anticlockwise direction until the tab of the lid is locked into the groove of handle properly. (Fig.2)

Fig.2

- Insert the smart dosage cup and lock it.

Disassembling The Blender

- Remove the plug from the socket.
- Remove the lid.
- Turn the jar anticlockwise and lift up.

Operating The Blender

- Place the blender on a levelled, dry surface.
- Remove the lid and place all the required ingredients into the jar.

  Important! Do not exceed the maximum capacity of 1.25litres.

- You can add other ingredients through the filler hole while the blender is running. You can use the smart dosage cup on the lid to do this. Close the filler hole immediately, to a void splashing
- Always operate the blender with the lid in place.
- Connect the plug to the wall outlet and set the speed selector to your desired setting.
- We recommend starting with blender speed 1, then progressing to speed 2. The pulse button runs the blender at full speed.
- Do not run the blender for more than 3 minutes per time. and only wait until the unit is cooled to room temperature before performing next operation cycles.
- Turn the speed selector to “O” Position once the mixture has been blended to your desired consistency. (Fig.3)

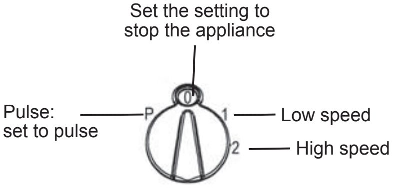

Fig.3

- Do not blend hot liquid.
- Remove the jar before taking off the lid.

Operating The Mill

- The mill is intended for grinding dry ingredients only.

  Place the motor base on a levelled dry surface. Make sure it is unplugged.
- Fill the bowl to its max indicator line.
- Then assemble the bowl cover by turn it in clockwise direction, until the tab of the cover is locked into the groove of the bowl.

  Fix the bowl assembly to the motor unit, ensure the tab of bowl cover is locked into the groove of motor unit by turn the assembly in clockwise direction. The position is a safety interlock device. (Fig.4 and Fig.5)

Fig.4

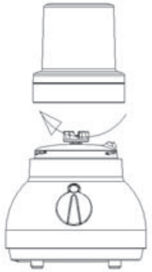

Fig.5

- You can turn the speed selector to the desired setting or hold on the “P” position if want to accelerate the process of blending.

  Note : The appliance allows you to grind up to a maximum of 30g coffee beans. Do not overfill the bowl.
- Never use the mill for more than 30 seconds without interruption.
- Before removing the cover, ensure the blade has stopped running.

Safety System

The safety system prevents the blender from being operated if the jar is not correctly seated.

Ice Crushing

The blender can be used for crushing ice. Always add a little water to the jar before using the blender to crush ice.

- Pour the water into the jar.
- Switch the blender on. Any speed setting may be used. However, max speed is ideally suited for ice crushing.
- You can add more ice through the filler hole on the lid while the blender is running.

Care and Cleaning

⚠ Before cleaning the blender, remove the plug from the socket.

⚠ Make sure that no liquid get inside the motor casing!

⚠ Clean the casing with a damp cloth. Never immerse in water or clean under running water.

- The jar and blade assembly can be cleaned quickly and safely using the Pulse Button.
  - Pour warm water into the jar, with a few drops of washing-up liquid.
  - Mix the water and washing-up liquid, by pushing the Pulse Button briefly.
  - Finally, rinse the jar under running water.
- To clean the mill, immerse the bowl and bowl cover into warm soapy water. Rinse under running water.
- Parts of the appliance may become discolored when it is used to process ingredients that contain a lot of pigment. That is normal.

Disposal

PACKAGING MATERIAL

The packaging materials are environmentally friendly and can be recycled. Please dispose of the packaging materials in the appropriate container at the community waste disposal facilities.

OLD APPLIANCE

The symbol on the product or on its packaging indicates that this product may not be treated as household waste. Instead it shall be handed over to the applicable collection point for the recycling of electrical and electronic equipment. By ensuring this product is disposed of correctly, you will help prevent potential negative consequences for the environment and human health, which could otherwise be caused by inappropriate waste handling of this product. For more detailed information about recycling of this product, please contact your local city office, your household waste disposal service or the shop where you purchased the product.

Customer Service

The highest quality standards apply for our appliances. If nevertheless a disturbance should arise, for which you can find no solution in the operating instructions, please contact your retailer or the Electrolux customer service.
0800 888 259 Monday-Friday 09:30-18:30

Technical data

Mains voltage: 110 V

Power consumption: 400 W

Frequency: 60 Hz

伊萊克斯股份有限公司 台灣分公司
台北市北投區大業路162號6F
Tel: 02-2898 5266　　Fax: 02-2898 5269
免費客服專線: 0800 888 259
Email: service@electrolux.com.tw
服務時間：週一至週五 上午9:30 - 下午6:30
邀請您感受我們對居家的美好想像 http://www.electrolux.com.tw

本產品僅供家庭使用。本使用說明書以實物為準，
伊萊克斯保留產品更新的權利，如有變動，恕不另行通知。